SYMBOLS NOMENCLATURE
AIR CIRCUIT BREAKER WITH RELEASES
INVERTER DUTY TRANSFORMER
CURRENT TRANSFORMER
POTENTIAL TRANSFORMER
ANNUNCIATOR
HOOTER
MINIATURE CIRCUIT BREAKER
R,Y,B LIVE INDICATING LAMPS
VACUUM CIRCUIT BREAKER
PUSH BUTTON
SURGE ARRESTER
MOULDED CASE CIRCUIT BREAKER

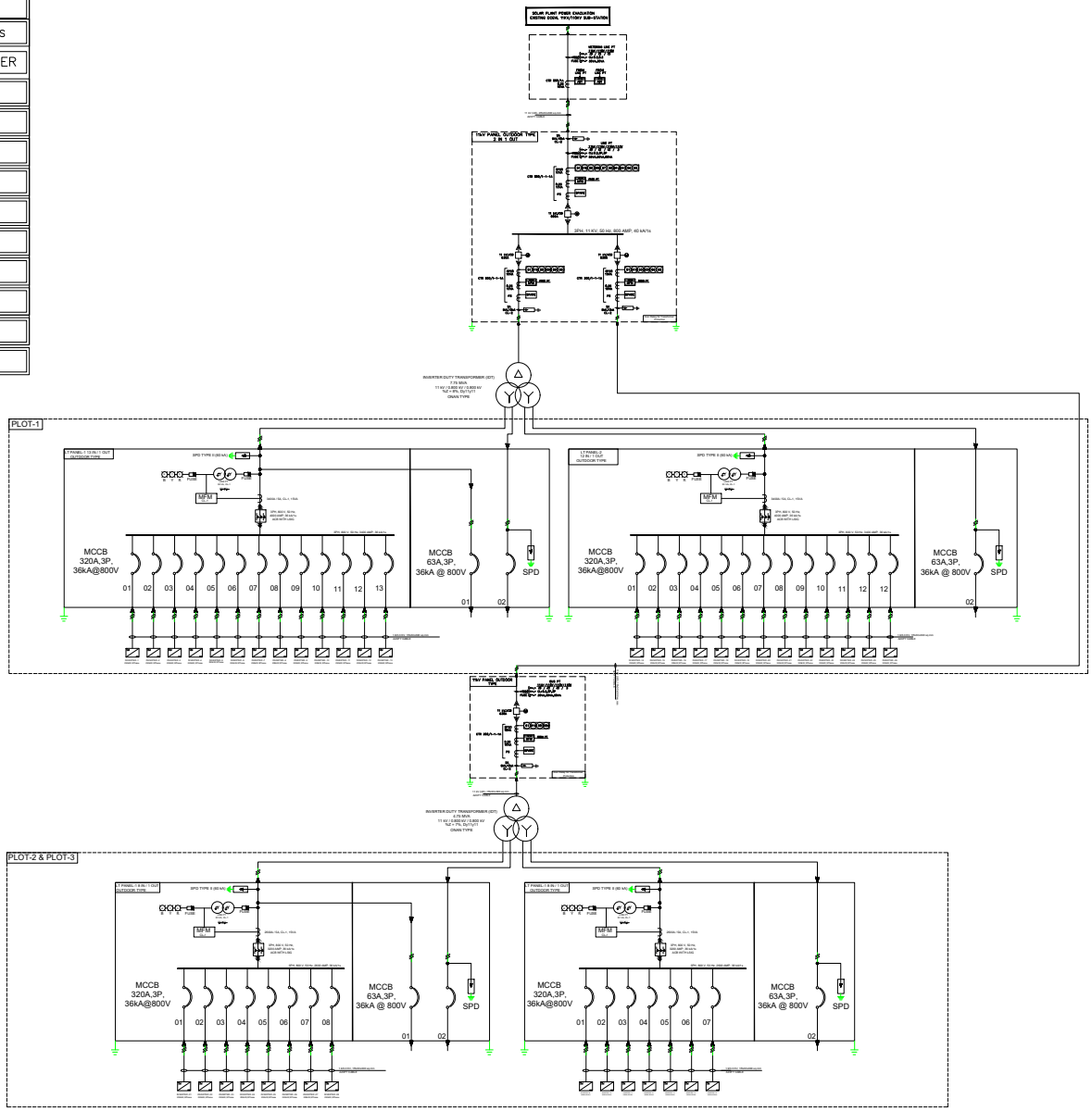

RELAY NOMENCLATURE	
SYMBOL	DESCRIPTION
50 51	INSTANTANEOUS OVER CURRENT & EARTH FAULT RELAY
50N 51N	IDMT OVER CURRENT & EARTH FAULT RELAY
86	MASTER TRIP RELAY
95	TRIP CIRCUIT SUPERVISION RELAY
74	MAGNETIC OIL LEVEL GAUGE
27	UNDER VOLTAGE RELAY
59	OVER VOLTAGE RELAY
81U	UNDER FREQUENCY RELAY
WTI	WINDING TEMPERATURE INDICATION
OTI	OIL TEMPERATURE INDICATION
63	BUCHHOLZ RELAY
H0	CIRCUIT BREAKER OFF
H1	CIRCUIT BREAKER ON
H4	CIRCUIT BREAKER AUTO TRIP
H5	TRIP CIRCUIT HEALTHY
H10	TEST POSITION
H11	SERVICE POSITION
H12	AC SUPPLY FAIL

SYSTEM DETAILS

Max.System Voltage	11 kV
Min. System Voltage	800V
Frequency (Hz)	50

Rev	Details of Revision and Description	Drawn	Design	Checked	Approved	Date
00	Released for Approval	HP	DP	ST	CPY	27.07.2023

FLASYS DESIGN